ERCS Series

Single Turn Hall Effect - Serial

P3 AMERICA
PRECISION SENSORS & JOYSTICKS

- SPI or SSI Interface
- Resolution up to 14 bit
- Redundant output option
- With or without mechanical end stop
- Life expectancy up to 15 mio. shaft revolutions
- Potted (sealed) electronics

In addition to being used as an angle sensor, the ERCS with optional mechanical stops and high torques can also function as manual set-point device.

Electrical Data		
Effective electrical angle of rotation	360°	
Independent linearity	±0.5%	
Output signal	**SPI (ERCS SPI)**	**SSI (ERCS SSI)**
Supply voltage	5 VDC ±10%	5V ±10% or 9 - 30 VDC
Resolution	14 bit	12 bit
Update rate	0.6 ms	0.1 ms
Frequency Response	5 KHz	10 KHz
Electrical Speed (Max)	800 rpm	1600 rpm
Current consumption (no load)	≤ 30 mA	
Insulation voltage	1000 VAC @ 50 Hz, 1 min.	
Insulation reistance	2 MOhm @ 500 VDC, 1 min.	

Mechanical and Environmental Data	
Mechanical angle of rotation	360º (continuous)
Maximum rotational speed	800 RPM (standard brass bearing) / 3000 RPM (optional polymer bearing)
Life expectancy	> 10M turns (brass bearing) / >15M turns (polymer bearing)
Starting torque	< 0.5 ~ 1 Ncm
Maximum radial load	1 N
Bearing	Brass (std) - Polymer bearing optional
Protection class	IP65 (electronics and cable)
Operating temperature	-40ºC...+85ºC
Storage temperature	-40ºC...+105ºC
Vibration (IEC 68-2-6, Test Fc)	20 g (±1.5mm, 10 to 2000 Hz, 16 ycles , 3 axis, (3x4 h)
Shock (IEC 68-2-7, Test Ea)	50 g (11ms, 18x)
Housing material	Nylon 66, 30% Glass Fiber Reinforced
Shaft material	Stainless steel
Cable	6 core flat cable. 0.15 m AWG28
Weight	approx. 18 g

Note: Customers should test and verify device performance in any given application. Shaft modifications are possible, please consult us. Specifications subject to change without notice.

P3 America, Inc.
7696 183A Toll Rd.
Unit 7B
Leander TX 78641

Phone: (512) 337-7336
sales@p3america.com
www.p3america.com

ERCS Series

Single Turn Hall Effect - Serial

Mechanical and Environmental Data (continued)

Max. radial load	1 N
Mass	Approx. 24 g
Fastening parts included in delivery	Hex nut and tooth washer
Fastening torque mounting nut	≤ 1 Nm
Material shaft	Stainless steel
Material housing	Plastic

Emission / Immunity

EN 55011 Emission AC/DC power	Class B
EN 55011 Emission housing	Class B
EN 61000-4-2 Immunity housing ESD	Class B
EN 61000-4-3 Immunity RF sine wave	Class A
EN 61000-4-4 Immunity DC power, I/O cable: Burst	Class B
EN 61000-4-5 Immunity DC power, I/O cable: Surge	Class B
EN 61000-4-6 Immunity DC power, I/O cable: Conducted sine wave	Class A

1.) According IEC 60393
2.) Determined by climatic conditions according to IEC 68-1, para. 5.3.1 without load collectives

Dimensions (mm)

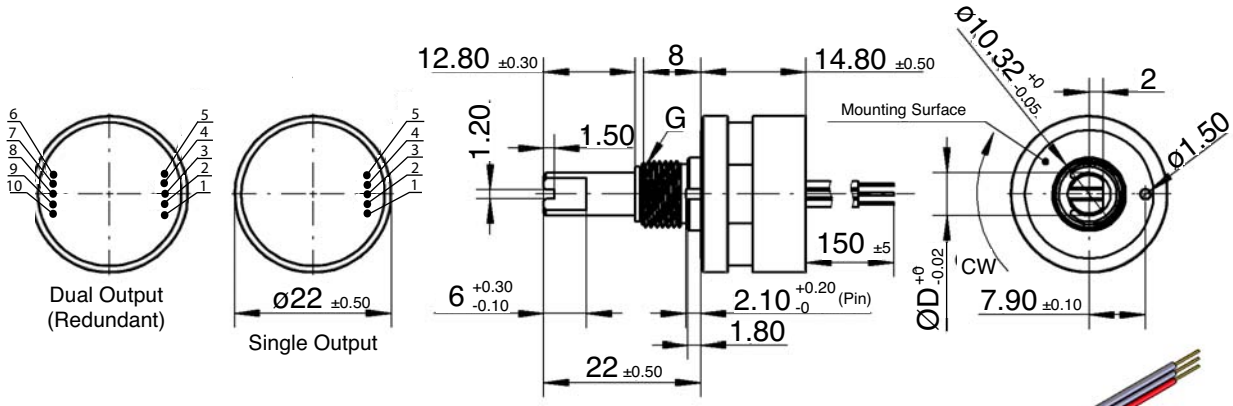

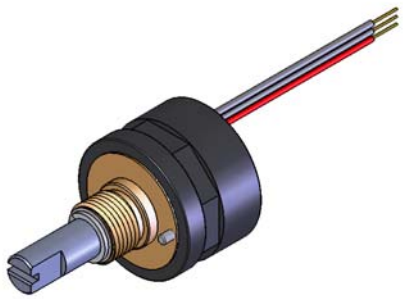

Cable Assignment	
VSUP 1	1
GND 1	2
DAT 1	3
CLK 1	4
CS 1	5
VSUP 2 (redundant)	6
GND 2	7
DAT 2	8
CLK 2	9
CS 2	10

Bushing	Dimension D	Dimension G
ERC 1	6mm	M10
ERC 3	1/4”	3/8 - 32

P3 America, Inc.
7696 183A Toll Rd.
Unit 7B
Leander TX 78641

Phone: (512) 337-7336
sales@p3america.com
www.p3america.com

Electrical Output Characteristic Options For Serial (SSI & SPI) Versions

Overview

Modern Hall IC's in combination with special magnets and RISC processors provide intelligent customizing of output signals and interfacing. This allows for rotary sensors capable of not only replacing precision potentiometers but also optoelectronic incremental and absolute encoders. The ERC series of rotary sensors are divided into three groups: analog types with absolute analog outputs (voltage, mA or PWM), incremental output and absolute SPI or SSI output. Because of a wide variety of mechanical and electrical options it is possible to use them in almost any automation and control application where rotary angular sensing is required. Regardless of the wide vairety of existing technical features, the price is relatively low.

SSI - Serial Synchronous Interface is wide spread in industrial applications with absolute angle sensors. There are a lot of programmable logic controls (PLC) or other peripheral appliances like counters available that can be easily configured for this communication. Furthermore, this interface is very insensitive against electromagnetic interferences because of the differential signals that should be transmitted via twisted shielded pair leads.

SPI Bus Interface. The serial peripheral interface or SPI Bus is a synchronous serial data link standard developed by Motorola that operates in full duplex mode. One or more devices can communicate with one master. The length of the signal wire should not be longer than 0.5m. To bridge longer distances it is recommended to use the SSI interface. The digital in 2 byte Grey code transmits the angular position information through the data bus.

Direction of Rotation (CW/CCW)

The default direction of rotation is CW. It is possible to program this to a CCW operation. This option must be specified during the ordering process.

Zero Point Programming (Z)

The electrical zero point is at the beginning of the signal rise. If a shaft marking is brought in line with the housing marking, the electrical zero point can be set to that position. It is also possible to offset the zero point at any position within the mechanical angle. Zero point programming must be specified during the ordering process.

Redundant Output (2 channel)

Only SPI versions are capable of redundant output. The hall sensor chip which is integrated into the sensor consists of two galvanically seperated sensor units which are influenced by the same magnetic field through the supplied special magnet. The sensor provides two operating modes: 1) redundancy, i.e., channel one and channel two are identical. If one channel fails, the other channel remains active. 2) It is also possible to have two different programs in the two channels.

SPI Interface

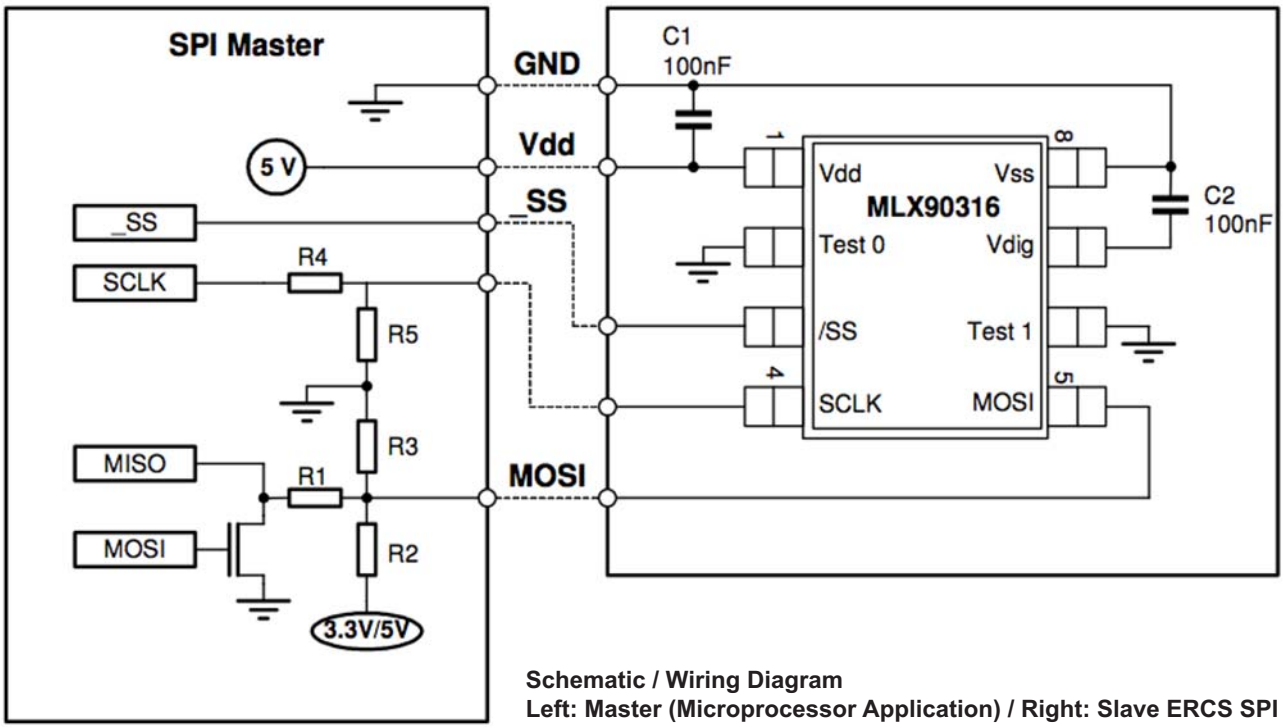

Schematic / Wiring Diagram
Left: Master (Microprocessor Application) / Right: Slave ERCS SPI

Microprocessors with open drain I/O can be used, however microcontrollers with integrated SPI-interface offer best performance. Serial protocol for the ERCS is a three wire protocol consisting of Slave-select, clock and dataline (MOSI-MISO).

Bidirectional data transmission is sent via one I/O port due to alternative use by master and slave in a dedicated sequence:

- -Master: 2 Start bytes (AAh and FFh)
- -Slave: : 2 data bytes followed by 2 inverted data bytes
- - 4 bytes no activity from master and slave (FFh)

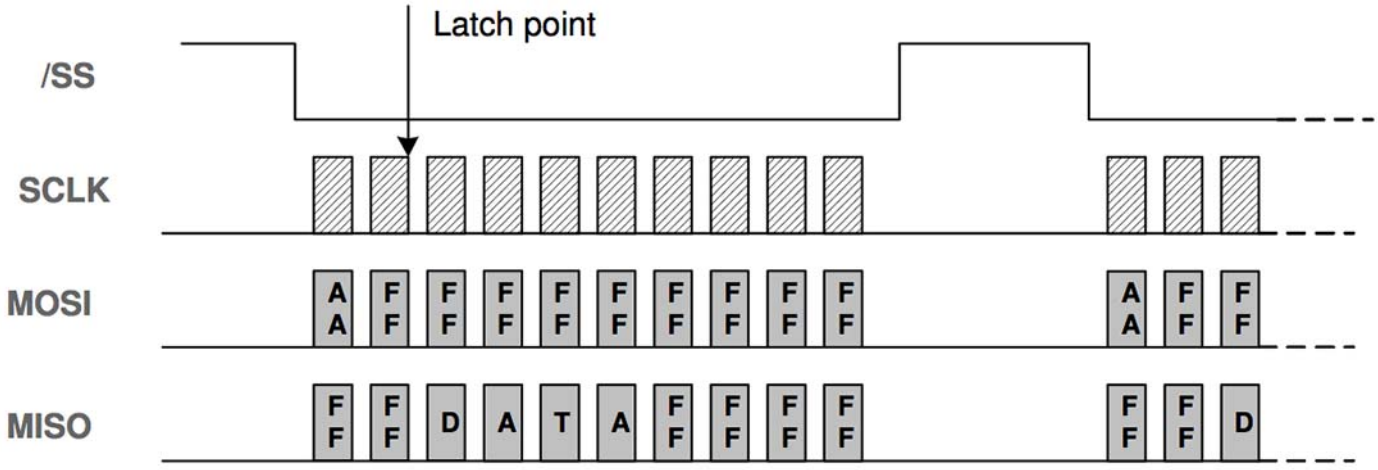

Note there are 8 clcok cycles per one byte. Above is an abstract clock symbol.

SSI Interface

SSI Interface is a wide spread in industrial applications with absolute angle sensors. There are any PLCs and other counter devices that can be easily configured for this form of communication. This interface is also very insensitive to electromagnetic interference due to data trasmission via twisted pair leads.

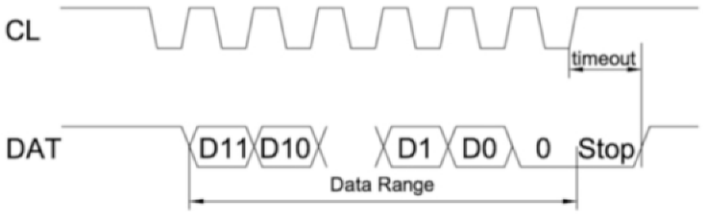

Timing Diagram

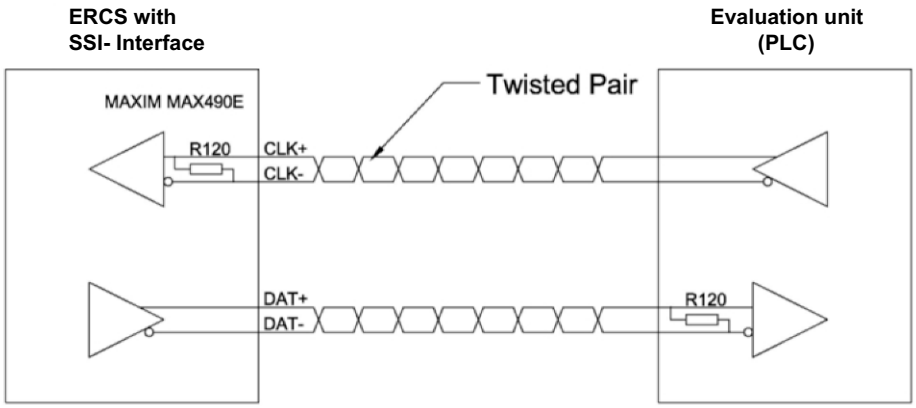

Schematic / Wiring Diagram

P3 America, Inc.
7696 183A Toll Rd.
Unit 7B
Leander TX 78641

Phone: (512) 337-7336
sales@p3america.com
www.p3america.com