REM13 Series
Linear Motion Conductive Plastic Potentiometer

P3 AMERICA
PRECISION SENSORS & JOYSTICKS

RoHS

- **Shaftless - Magnetic Drag Cursor**
- **Completely Sealed (IP67)**
- **Adjustable Mounting Brackets**
- **Anodized Aluminum Housing**
- **50mm to 1000mm Stroke Lengths**
- **Up to 5 m/s Displacement Speed**

Electrical Data (Note 1)	**REM13 -**	**50**	**100**	**150**	**200**	**250**	**300**	**350**	**400**	**450**	**500**	**600**	**750**	**850**	**900**	**950**	**1000**
Electrical Stroke (mm ±1)		50	100	150	200	250	300	350	400	450	500	600	750	850	900	950	1000
Resistance Value		5kΩ						10kΩ					20kΩ				
Resistance Tolerance		±20%															
Independent Linearity Tolerance		±0.1%		±0.05													
Power (@ 40ºC)		1W	2W	3W													
Max. Operating Voltage		40V	60V														
Resolution		Essentially infinite															
Temperature Coefficient Resistance		400 ppm/ºC															
Temperature Coefficient Voltage Divider		≤ 5 ppm/ºC															
Insulation Resistance		> 100M Ω at 500VDC															
Dielectric Strength		< 100 µA at 500V~, 50Hz, 2s, 1 bar															
Maximum Wiper Current		10mA															
Recommended Wiper Current		< 0.1µA (voltage divider circuit)															

Mechanical Data (Note 1)	**REM13 -**	**50**	**100**	**150**	**200**	**250**	**300**	**350**	**400**	**450**	**500**	**600**	**750**	**850**	**900**	**950**	**1000**
Mechanical Stroke (mm ±1)		55	105	155	205	255	305	355	405	455	505	605	755	855	905	955	1005
Cursor Drag Force		≤ 0.5N															
Max. Displacement Speed		≤ 5 m/s															
Life Expectancy		100,000,000 reciprocating motions															
Operating Temperature		-30ºC to +100ºC															
Storage Temperature		-45ºC to +120ºC															
Vibration		12G 10 to 2,000Hz															
Shock		50G, 11ms															
Protection Grade		IP67															
Housing Material		Anodized aluminum, PSU															
Mounting		Adjustable Brackets															

Customers should test and verify device performance in any given application. Specifications are subject to change without notice.

P3 America, Inc.
7696 183A Toll Rd.
Unit 7B
Leander TX 78641

Phone: (512) 337-7336
sales@p3america.com
www.p3america.com

Dimensions (mm)

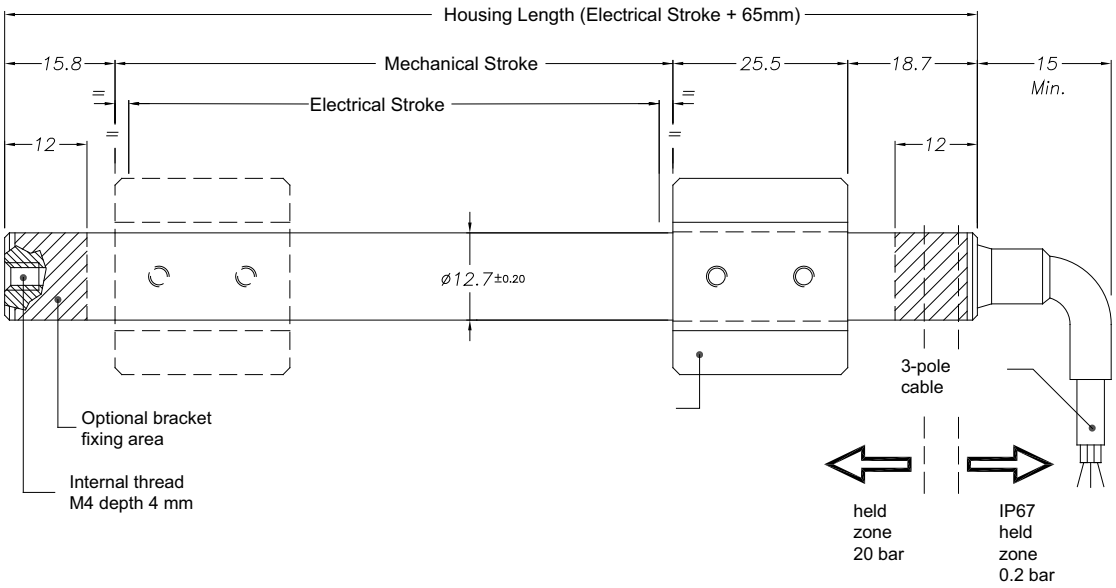

Mounting Brackets

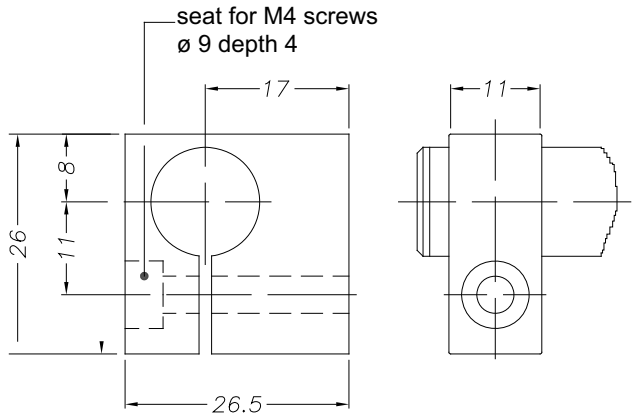

Cursor

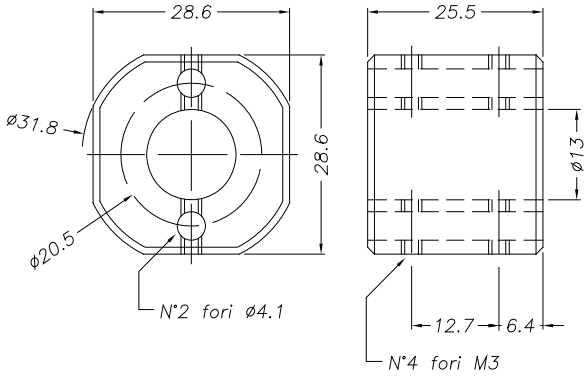

Optional Connector

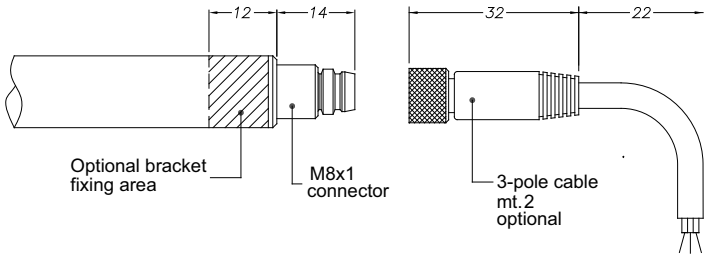

Optional Cursor w/Ball Joint

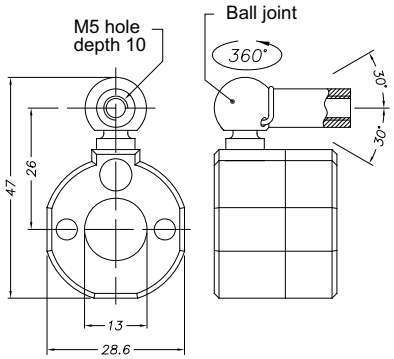

P3 America, Inc.
7696 183A Toll Rd.
Unit 7B
Leander TX 78641

Phone: (512) 337-7336
sales@p3america.com
www.p3america.com

Tracking Error

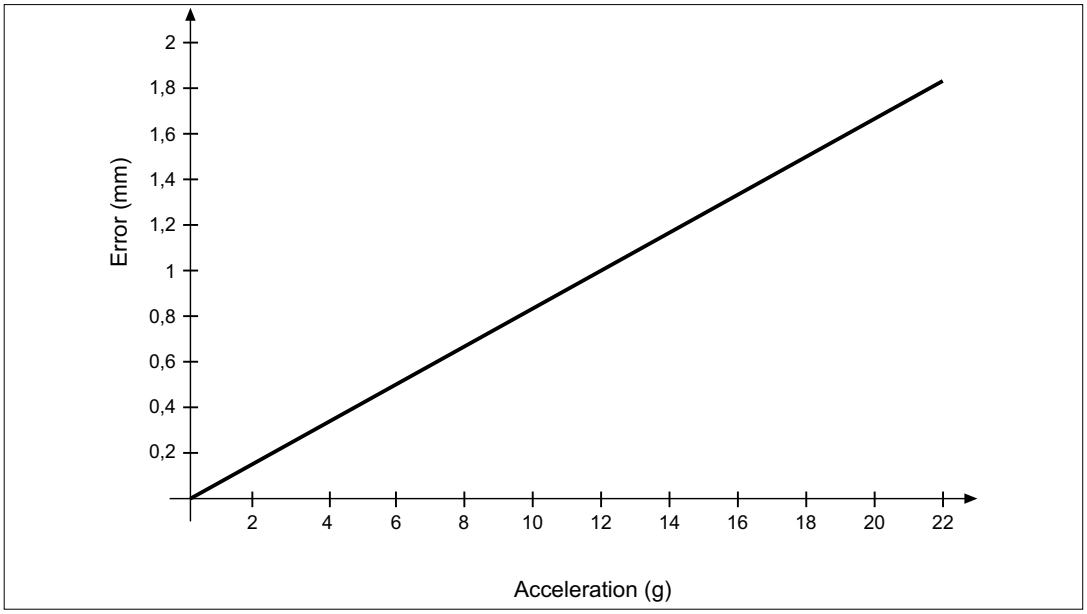

Electrical Connections

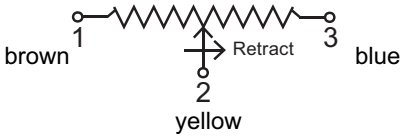

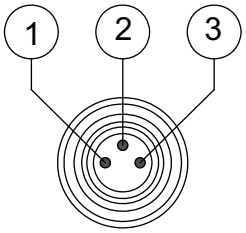

Connector Version (optional)

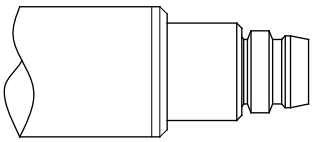

INSTALLATION INSTRUCTIONS

- Make the specified electrical connections (DO NOT use the transducer as a variable resistance)
- When calibrating the transducer, be careful to set the stroke so that the output does not drop below 1% or rise above 99% of the voltage level.

P3 America, Inc.
7696 183A Toll Rd.
Unit 7B
Leander TX 78641

Phone: (512) 337-7336
sales@p3america.com
www.p3america.com