RPH Series
Linear Motion Potentiometer

P3 AMERICA
PRECISION SENSORS & JOYSTICKS

- **Sliding cursor (shaftless)**
- **Pivot linkage for lateral mis-alignment**
- **Excellent repeatability <0.01mm**
- **Infinite resolution**
- **Precision linearity**
- **100.....1950 mm measuring**

Technical Specifications

Measurement stroke	100 to 1950 mm
Linearity	± %0,05 (>200 mm), ±%0,1 (130 - 200 mm), ±%0,2 (75 - 130 mm), ±%0,5 (<75 mm)
Repeatability	< 0,01 mm
Resolution	Infinite
Resistance	5 kOhm : 100 ... 600 mm 10 kOhm : 650 ... 1000 mm 20 kOhm : 1250 ... 1950 mm
Resistance tolerance	± %20
Load resistance	100 kOhm min.
Recommended cursor current	< 1 µA
Permissible applied voltage	28 VDC max.
Electrical connections	4 pin connector
Displacement speed	< 5 m/s
Mechanical life	100 million movement
Case dimensions	33 mm x 33 mm
Case material	Anodized aluminium
Mechanical fixing	Variable brackets
IP degree	IP 40 (if mounted upside down IP 53)
Operating temperature	-20°C ... +80°C
Storage temperature	-30°C ... +90°C

Dimensions (mm)

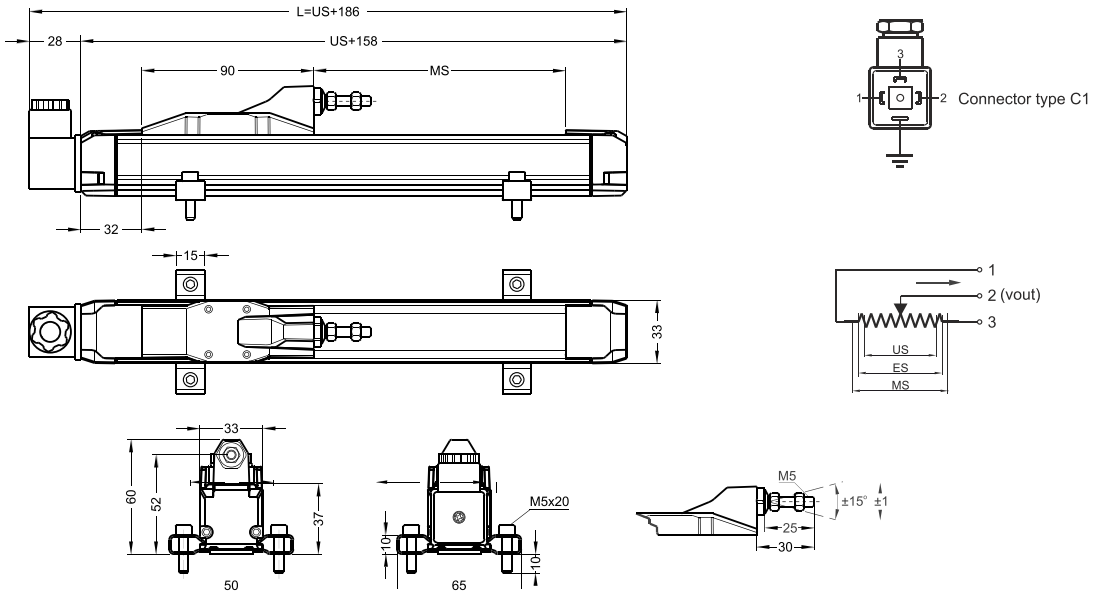

RPH (mm)	100	125	130	150	175	200	225	250	275	300	325	350	375	400	450	500	550	600	650	700	750	800	850	900	1000	1250	1500	1750	1950
US (Useful stroke)	100	125	130	150	175	200	225	250	275	300	325	350	375	400	450	500	550	600	650	700	750	800	850	900	1000	1250	1500	1750	1950
MS (Mechanical stroke)	104	129	134	154	179	204	229	254	279	304	329	354	379	404	454	504	554	604	654	704	754	804	854	904	1004	1254	1504	1754	1954
L (Total Length)	296	311	315	336	361	386	411	436	461	486	511	536	561	586	636	686	736	786	836	886	936	986	1036	1086	1186	1436	1686	1936	2136

P3 America, Inc.
7696 183A Toll Rd.
Unit 7B
Leander TX 78641

Phone: (512) 337-7336
sales@p3america.com
www.p3america.com

RPH Series
Linear Motion Potentiometer

P3 AMERICA
PRECISION SENSORS & JOYSTICKS

Ordering Code

Model	Measurement stroke (mm)	Linearity (%)	Resistance (kOhm)	Connector / Cable
RPH	**500**	**D**	**5K**	**C1**
RPH	100 - 1950 mm	A: ±%0,5 (<75mm) B: ±%0,2 (75 - 130mm), C: ±%0,1 (130 - 200mm), D: ±%0,05 (>200mm)	5K : 5 kOhm (75-600mm) 10K : 10 kOhm (650-1000mm) 20K : 20 kOhm (1250-1950mm)	C1 : 4 pin connector 1M : 1 meter cable Mx5 : Pin connector

Examples:
RPH 100 D 5K C1
RPH 750 D 10K C1
RPH 1500 D 20K C1

P3 America, Inc.
7696 183A Toll Rd.
Unit 7B
Leander TX 78641

Phone: (512) 337-7336
sales@p3america.com
www.p3america.com