SPE Series

Single Turn Encoder
(Optical, Incremental)

P3 AMERICA
PRECISION SENSORS & JOYSTICKS

- Compact design (Ø22 mm x 11 mm)
- Resolution: 100...360 p.p.r
- Sleeve bearing for manual operations
- Ball bearing option for longest life and high rpms
- TTL or Linedriver output

The SPE is low cost encoder suitable for a wide range of applications, as a manual set point device or sensor. Sleeve bearing with or without increased torque for manual set point applications. Optional ball bearings for RPMs up to 15000 and lowest torque.

Note: Molex connector not included (optional part with 500 mm AWG28 leads)

Electrical Data	
Resolution	100, 108, 120, 125, 128, 200, 250, 256, 300, 360 p.p.r.
Output channels	A, B
Output signal	**TTL**: 5V - A, B / **Linedriver**: differential 3.8V - A, /A, B, /B
Supply voltage	5 VDC ±5%
Current consumption	≤ 32 mA (typ. 27 mA)
Output high voltage	**TTL**: ≥ 2.4V @ 8 mA load
Output low voltage	**TTL**: ≤ 0.4V @ 8 mA load
Differential output voltage	**Linedriver**: ≥ 3.0V @ RL = 100 Ω

Mechanical and Environmental Data		
Bearing	**Sleeve bearing**	**Ball bearing**
Max rotational speed	100 rpm	15,000 rpm
Starting torque	≤ 0.3 Ncm (≤ 0.5 Ncm option)	≤ 0.04 Ncm
Max radial load	1N	
Operating temperature	-20°C..+100°C	
Storage temperature	-20°C..+100°C	
Protection grade	IP40	
Vibration	20 g (20...2 kHz) sinusoidal	
Shock	75 g / 6 ms / half sine	
Housing material	Plastic	
Shaft material	Metal	
Weight	approx. 13 g	
Electrostatic discharge	12 kv (human body model. MIL-STD-883, Method 3015.8)	
Fastening parts	Hex nut, tooth washer (included)	
Max. torque on mounting nut	< 2.25 Nm	

Note: Customers should test and verify device performance in any given application. Shaft modifications are possible, please consult us. Specifications subject to change without notice.

P3 America, Inc.
7696 183A Toll Rd.
Unit 7B
Leander TX 78641

Phone: (512) 337-7336
sales@p3america.com
www.p3america.com

SPE Series

Single Turn Encoder
(Optical, Incremental)

P3 AMERICA
PRECISION SENSORS & JOYSTICKS

Dimensions (mm)

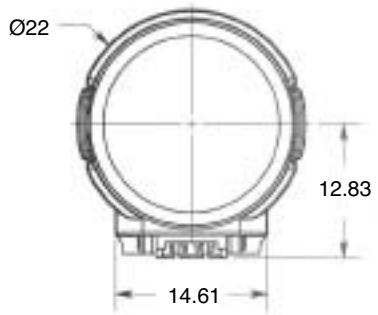

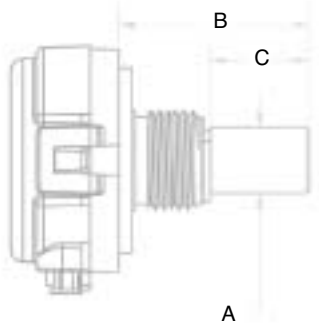

	Shaft Option	A	B	C
Sleeve Bearing	3.17 mm	3.175 mm	18.54 mm	8.89 mm
	6 mm	6 mm	18.54 mm	8.89 mm
	6.35 mm	6.35 mm	18.54 mm	9.53 mm
Ball Bearing	3.17 mm	3.175 mm	18.80 mm	9.53 mm
	6 mm	6 mm	18.42 mm	9.53 mm
	6.35 mm	6.35 mm	18.42 mm	9.53 mm

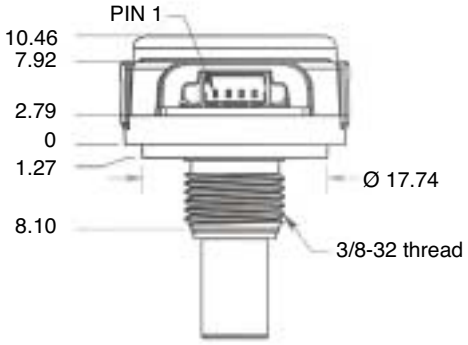

TTL (5V)

Mating connector (not included)
Housing: Molex # 51021-0400
Pins: Moloex # 50079-8100

Line Driver (differential)

Mating connector (not included)
Housing: Molex # 51021-0600
Pins: Moloex # 50079-8100

Signal characteristics

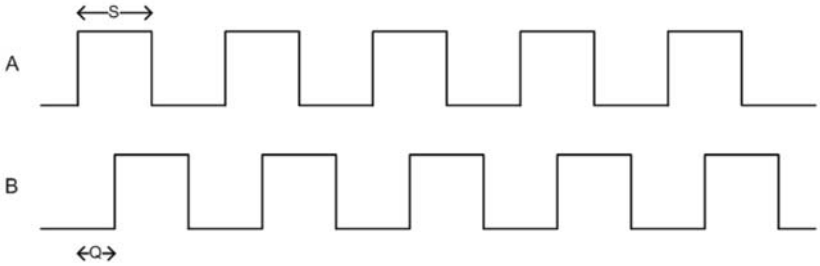

A leads B for clockwise shaft rotation.
Viewed from shaft end.

P3 America, Inc.
7696 183A Toll Rd.
Unit 7B
Leander TX 78641

Phone: (512) 337-7336
sales@p3america.com
www.p3america.com