STC22E / STC22ES Series

Single Turn Potentiometer
(Conductive Plastic)

Model STC22E

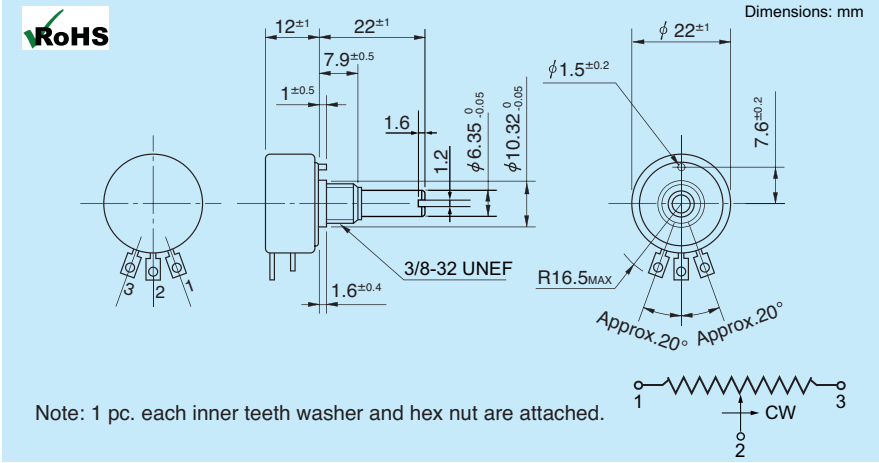

Note: 1 pc. each inner teeth washer and hex nut are attached.

• Model Nos.

STC22E	(without stop, continuous)
STC22ES	(with stop)

• General Specifications (Note 1)

Resistance Values (Ω):	500, 1K, 2K, 5K, 10K, 20K, 50K, 100K
Resistance Tolerance:	Standard Class ±15% Precision Class ±10%
Independent Linearity Tolerance:	Standard Class ±1.0%
Resolution:	Essentially Infinite
Output Smoothness:	Below 0.1% against input voltage
Rotational Life:	10,000,000 shaft revolutions (no load)
Protection Grade:	IP40 (IP54 option)
Operating Temperature:	-55°C ~ +105°C (Note 1)

Contact Resistance Variation:	Below 2% C.R.V.
Power Rating:	1.0W @ 70°C (0W @ 105°C)
Electrical Travel:	320° ±5°
Mechancial Travel:	STC22E 360° (continuous) STC22ES 320°
Insulation Resistance:	> 1000M ohms @ 500 VDC
Dielectric Strength:	1 minute @ 500 VAC
Starting Torque:	Below 5mN•m (50gf•cm)
Temperature Coefficient:	±400p.p.m / °C
Vibration:	15G / 10Hz to 2,000Hz
Shock:	50 G / 11ms
Mass:	Approx 20g

• Special Specifications Available

Extra taps (available up to 1 tap). Rear shaft (6mm dia. and 20mm length). Multi-ganged (up to 10 gangs). With mechanical stopper (mechanical angle becomes 320° and stopper strength is 0.6N•m (6kgf•cm). Special electrical travel. Special shaft machining. Please consult us for these or further modifications.

Note 1: Customers should test and verify device performance in any given application.

P3 America, Inc.
7696 183A Toll Rd.
Unit 7B
Leander TX 78641

Phone: (512) 337-7336
sales@p3america.com
www.p3america.com